N Female Connector Solder Attachment for PE-SR402AL, PE-SR402FL, RG402



PE4652

Configuration

- N Female Connector
- MIL-STD-348A
- 50 Ohms
- Straight Body Geometry
- Connector Interface Types: PE-SR402AL, PE-SR402FL, RG402

Features

- Max. Operating Frequency 11 GHz
- Gold Plated Beryllium Copper Contact
- Contact plating according to MIL-G-45204

Applications

- General Purpose Test
- Custom Cable Assemblies

Description

Pasternack's PE4652 type N Female Connector Solder/Solder Attachment for PE-SR402AL, PE-SR402FL and RG402 Cable is part of our full line of RF components available for same-day shipping. Our type N female connector operates up to a maximum frequency of 11 GHz.

Our type N female connector PE4652 datasheet specifications and drawing with dimensions are shown below in this PDF. Pasternack's broad catalog of RF, microwave and millimeter wave connectors allows designers to configure and customize their signal connections however they like. Whether the need is to provide an I/O for a board design, or simply create a custom cable assembly configuration, Pasternack has the right connector for the job. Pasternack can also expertly build your custom cable assemblies for you and ship same-day.

Electrical Specifications

Description	Minimum	Typical	Maximum	Units
Frequency Range	DC		11	GHz
Operating Voltage (AC)			1,000	Vrms
Dielectric Withstanding Voltage (AC)			2,500	Vrms
Insulation Resistance	5,000			MOhms
Impedance		50		Ohms

Mechanical Specifications

Size	
Length	1.07 in [27.18 mm]
Width	0.625 in [15.88 mm]
Height	0.625 in [15.88 mm]
Weight	0.055 lbs [24.95 g]
Mating Cycles	500 Cycles

© 2026 Infinite Electronics, Inc. Pasternack is a registered trademark of Infinite Electronics, Inc.

+1 (866) 558-2786 | sales@pasternack.com | pasternack.com

N Female Connector Solder Attachment for PE-SR402AL, PE-SR402FL, RG402



PE4652

Material Specifications

Description	Material	Plating
Contact	Beryllium Copper	Gold MIL-G-45204
Insulation	PTFE	
Body	Passivated Stainless Steel	QQ-P-35
Coupling Nut	Brass	Gold
O-Ring	Silicone	

Environmental Specifications

Temperature

Operating Range	-65 to +165 deg C

Compliance Certifications (see product page for current document)

Plotted and Other Data

Notes:

N Female Connector Solder Attachment for PE-SR402AL, PE-SR402FL, RG402 from Pasternack Enterprises has same day shipment for domestic and International orders. Our RF, microwave and millimeter wave products maintain a 99.4% availability and are part of the broadest selection in the industry.

Click the following link (or enter part number in "SEARCH" on website) to obtain additional part information including price, inventory and certifications: N Female Connector Solder Attachment for PE-SR402AL, PE-SR402FL, RG402 PE4652

URL: https://www.pasternack.com/n-female-standard-pe-sr402al-pe-sr402fl-rg402-connector-pe4652.html

The information contained within this document is accurate to the best of our knowledge and representative of the part described herein. It may be necessary to make modifications to the part and/or the documentation of the part in order to impliment improvements. Pasternack Enterprises reserves the right to make such changes as required. Unless otherwise stated, all specifications are nominal. Pasternack Enterprises does not make any representation or warranty regarding the suitability of the part described herein for any particular purpose, and Pasternack Enterprises does not assume liability arising out of the use of any part or document.

© 2026 Infinite Electronics, Inc. Pasternack is a registered trademark of Infinite Electronics, Inc.

PE4652 CAD Drawing

N Female Connector Solder Attachment for PE-SR402AL, PE-SR402FL, RG402

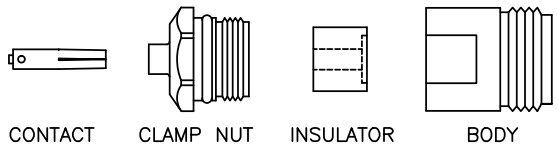

ASSEMBLY PROCEDURES

1. STRIP CABLE AS SHOWN. DO NOT NICK CENTER CONDUCTOR.

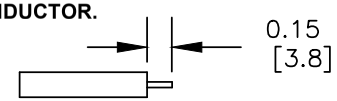

2. SOLDER CONTACT TO CENTER CONDUCTOR.

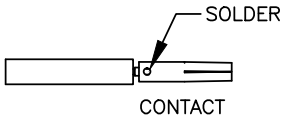

3. ASSEMBLE CLAMP NUT, INSULATOR AND BODY TOGETHER. INSERT CABLE THROUGH CLAMP NUT UNTIL IT BOTTOMS OUT.

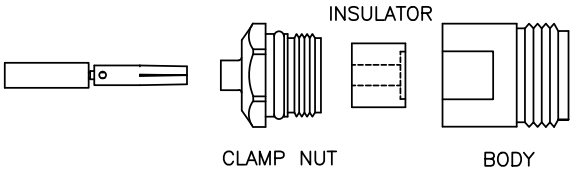

4. SOLDER OUTER CONDUCTOR TO CLAMP NUT AND TIGHTEN CLAMP NUT TO BODY.

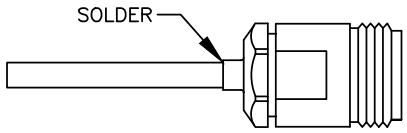

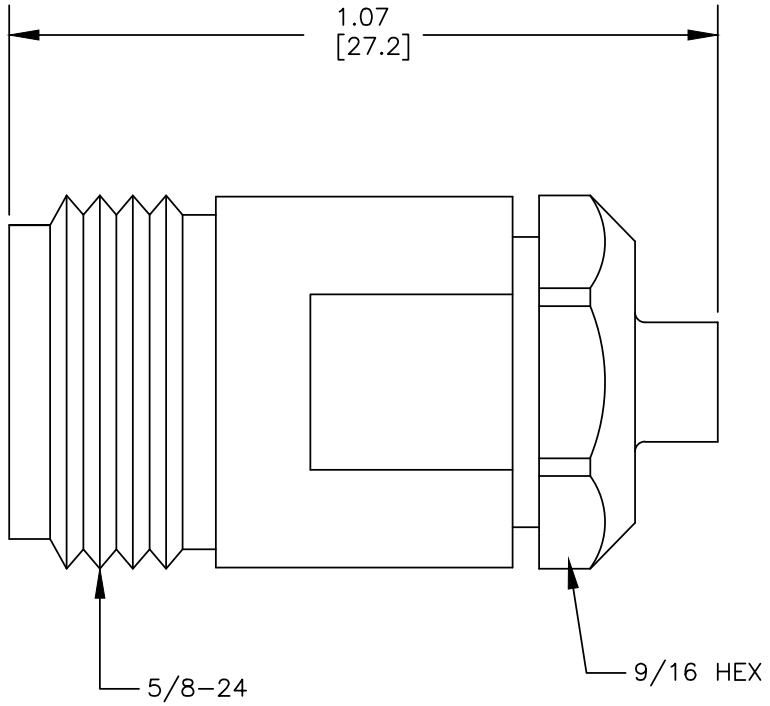

PASTERNACK®
Pasternack Enterprises, Inc.
P.O. Box 16759 | Irvine | CA | 92623
Phone: (949) 261-1920 | **Fax:** (949) 261-7451
Website: www.pasternack.com | **E-Mail:** sales@pasternack.com

DWG TITLE **PE4652**

NOTES:
1. UNLESS OTHERWISE SPECIFIED ALL DIMENSIONS ARE NOMINAL.
2. ALL SPECIFICATIONS ARE SUBJECT TO CHANGE WITHOUT NOTICE AT ANY TIME.
3. DIMENSIONS ARE IN INCHES [mm].
4. FITS MIL-C-17 AND EQUIVALENT CABLES.

REV. A	FSCM NO. 53919	CAD FILE 021813-A	SCALE N/A	SIZE A	127

© 2025 Infinite Electronics, Inc. Pasternack is a registered trademark of Infinite Electronics, Inc.