PASTERNACK
an INFINITE brand

2400-2500 MHz, 3.67 dBi, Stamped Metal AP/Router Embedded Antenna With IPEX Connector-50 Pack

Antennas Technical Data Sheet PESMA1010-50PK

Features

- High Efficiency
- Isotropic radiation patterns
- Linear polarization
- Ultra-Compact design
- Low loss material - Nickel-Plated brass
- Extended operating temperatures
- On board mount
- Frequency stabilization
- IPEX connector - 145mm cable
- 50-pack for easy buy

Applications

- IoT, M2M, Telemetry
- Wireless Remote Control
- Personal Area Networks(PAN)
- Industrial/Commercial Equipment
- 2.4/5 GHz - Wi-Fi/BT/BLE/ZigBee/ISM applications
- IEEE802.11a/b/g/n/ac embedded applications
- Remote Technology / Monitoring
- Consumer Tracking
- Smart Home / Wearables / Devices
- Agriculture, healthcare, digital signage

Description

Linear polarized antenna PESMA1010-50PK from Pasternack is part of our extensive in-stock omni directional antennas that ship the same day from our ISO 9001:2015 certified facility. The stamped metal antenna with an IPEX connector has a maximum frequency of 2500 MHz and a minimum frequency of 2400 MHz. This 50-pack stamped metal antenna has a maximum input VSWR of 2:1.

This stamped metal antenna with an IPEX connector has an overall length of 1.09 inches and a width of 0.19 inches. Pasternack's PESMA1010-50PK is a single band antenna operating from 2400 to 2500 MHz with a 3.67 dBi gain. Our high-quality 50-pack omni directional antenna has an impedance of 50 Ohms.

Pasternack's experts are on hand to assist you with any inquiries. Order this PESMA1010-50PK 50-pack stamped metal antenna 7 days a week, 24 hours a day, using our on-line ordering system with no MOQs (minimum order quantity) and same-day shipping. Our knowledgeable sales team and ability in the global availability market allow us to lead the industry in supplying RF products like these omni directional antennas.

Configuration

Design	Stamped Metal
Band Type	Single
Radiation Pattern	Omni Directional
Polarization	Linear
Cable Length	5.7 in [144.78 mm]
Connector Type	IPEX

Electrical Specifications

Description	Minimum	Typical	Maximum	Units
Frequency Range	2,400		2,500	MHz
Input VSWR			2:1	
Impedance		50		Ohms
Gain		3.67		dBi
Input Power			1	Watt

Click the following link (or enter part number in "SEARCH" on website) to obtain additional part information including price, inventory and certifications: 2400-2500 MHz, 3.67 dBi, Stamped Metal AP/Router Embedded Antenna With IPEX Connector-50 Pack PESMA1010-50PK

Pasternack Enterprises, Inc. • P.O. Box 16759, Irvine, CA 92623
Phone: (866) 727-8376 or (949) 261-1920 • **Fax:** (949) 261-7451
Sales@Pasternack.com • Techsupport@Pasternack.com

© 2020 Pasternack Enterprises All Rights Reserved

2400-2500 MHz, 3.67 dBi, Stamped Metal AP/Router Embedded Antenna With IPEX Connector-50 Pack

Antennas Technical Data Sheet — PESMA1010-50PK

Mechanical Specifications

Size

Overall Length	1.09 in [27.69 mm]
Width	0.19 in [4.83 mm]
Height	0.5 in [12.7 mm]

Environmental Specifications

Temperature

Operating Range	-40 to +85 deg C

Compliance Certifications (see product page for current document)

Plotted and Other Data

Notes:

2400-2500 MHz, 3.67 dBi, Stamped Metal AP/Router Embedded Antenna With IPEX Connector-50 Pack from Pasternack Enterprises has same day shipment for domestic and International orders. Our RF, microwave and millimeter wave products maintain a 99.4% availability and are part of the broadest selection in the industry.

Click the following link (or enter part number in “SEARCH” on website) to obtain additional part information including price, inventory and certifications: 2400-2500 MHz, 3.67 dBi, Stamped Metal AP/Router Embedded Antenna With IPEX Connector-50 Pack PESMA1010-50PK

URL: https://www.pasternack.com/3.67-stamped-metal-antenna-2400-2500-mhz-invalid-alias-lookup-for-ipex-connector-pesma1010-50pk-p.aspx

The information contained in this document is accurate to the best of our knowledge and representative of the part described herein. It may be necessary to make modifications to the part and/or the documentation of the part, in order to implement improvements. Pasternack reserves the right to make such changes as required. Unless otherwise stated, all specifications are nominal. Pasternack does not make any representation or warranty regarding the suitability of the part described herein for any particular purpose, and Pasternack does not assume any liability arising out of the use of any part or documentation.

Pasternack Enterprises, Inc. • P.O. Box 16759, Irvine, CA 92623
Phone: (866) 727-8376 or (949) 261-1920 • **Fax:** (949) 261-7451
Sales@Pasternack.com • Techsupport@Pasternack.com

© 2020 Pasternack Enterprises All Rights Reserved

PESMA1010-50PK CAD Drawing

2400-2500 MHz, 3.67 dBi, Stamped Metal AP/Router
Embedded Antenna With IPEX Connector-50 Pack

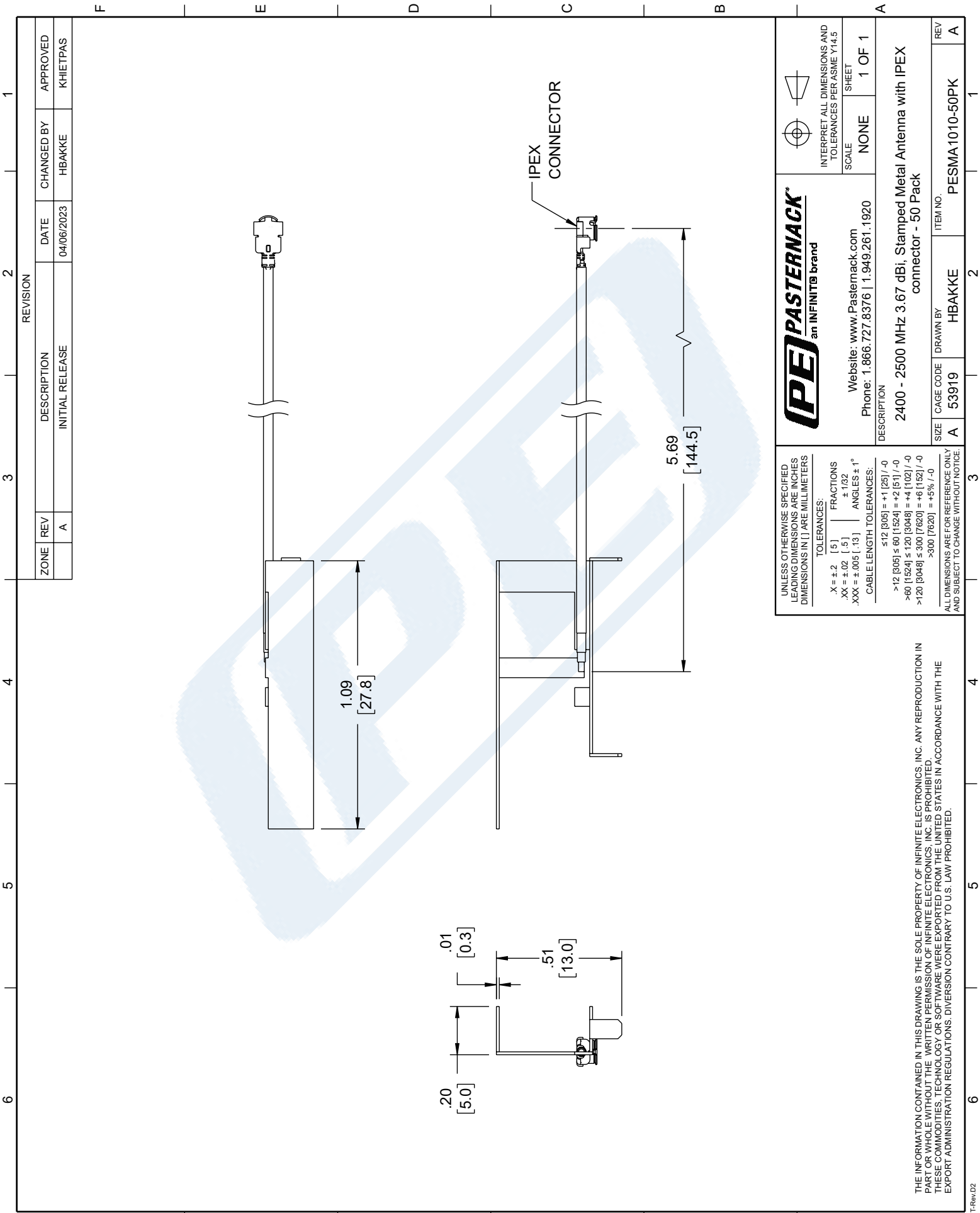

© 2020 Pasternack Enterprises All Rights Reserved